Naypyidaw folding solar integrated energy storage cabinet wholesale

Naypyidaw folding solar integrated energy storage cabinet wholesa

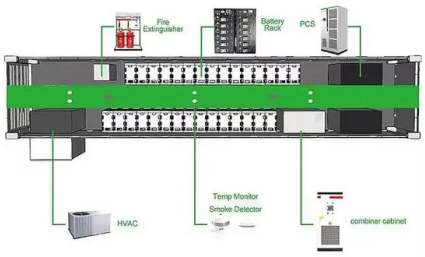

NAYPYIDAW ENERGY STORAGE CONTAINER MANUFACTURER

Why should you choose energy storage cabinets?This ensures that energy storage cabinets can provide a complete solution in emergency situations such as fires. To accommodate different climates, we ...

Solar storage and charging integrated cabinet 172KWh+120KW

Solar storage and charging integrated cabinet 172KWh+120KW-All-In-One with PV, Charger and Energy storage system DC coupling and AC coupling-SHENZHEN iYPOWER CO., LTD.

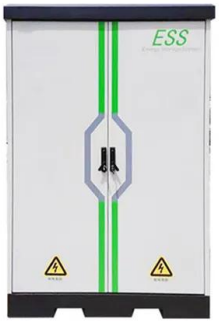

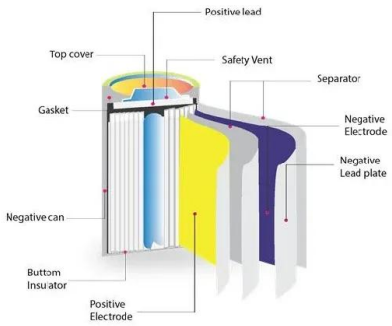

Integrated energy storage cabinets

To use an integrated energy storage cabinet, install batteries and related equipment into designated compartments. The cabinet provides a centralized and secure storage solution for energy storage ...

Energy Storage Equipment, Energy storage solutions, Lithium battery

Huijue Group offers industrial and commercial energy storage, PV-BESS -EV Charging, Off-grid / On-grid Microgrid, telecom site solutions, and home solar energy storage, ensuring ...

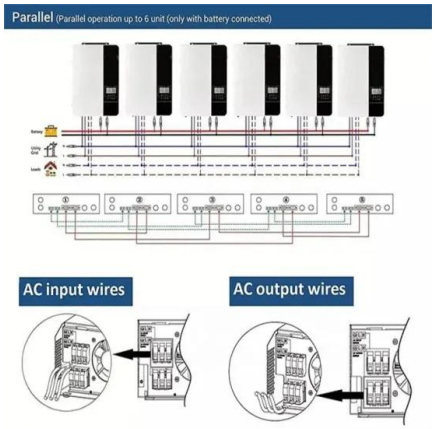

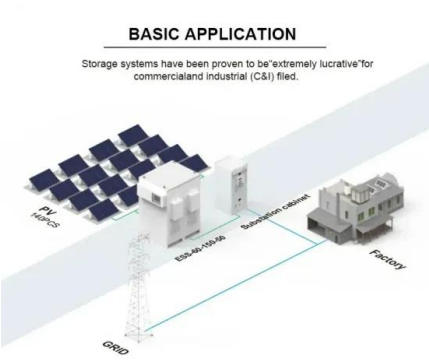

[Solar Container , Large Mobile Solar Power Systems]

LZY mobile solar systems integrate foldable, high-efficiency panels into standard shipping containers to generate electricity through rapid deployment generating 20-200 kWp solar arrays, reducing reliance ...

[Integrated Solar Energy Storage Cabinets , Guangdong Ruihan ...]

Guangdong Ruihan offers integrated solar storage cabinets with MPPT inverters, lithium batteries & hybrid systems. Fully automated production ensures durability and performance. Request system ...

[Wholesale Solar Battery Storage Cabinet Product, Quotes]

As a trusted partner in renewable energy, we specialize in providing top-of-the-line Wholesale Solar Battery Storage Cabinets tailored to meet the diverse needs of businesses.

Solar Battery Storage Cabinet

The LZY solar battery storage cabinet is a tailor-made energy storage device for storing electricity generated through solar systems. They assure perfect energy management to continue power ...

China Energy Cabinet, Energy Cabinet Wholesale, Manufacturers, ...

Design engineers or buyers might want to check out various Energy Cabinet factory & manufacturers, who offer lots of related choices such as distribution cabinet, energy storage cabinet and electrical ...

Integrated Energy Storage Cabinet

The Cabinet offers flexible installation, built-in safety systems, intelligent control, and efficient operation. It features robust lithium iron phosphate (LiFePO4) batteries with scalable capacities, supporting on ...

Contact Us

For catalog requests, pricing, or partnerships, please visit: https://xraydiamondsolutions.co.za